~~C-3886-D-1048~~

"THIS DOCUMENT AND DATA PROPERTY OF THE GOVERNMENT AND MAY NOT BE REPRODUCED AND USED IN CONNECTION WITH ANY GOVERNMENT PROCUREMENT OR MANUFACTURING OPERATION."

*FOR INFORMATION ONLY, CONTRACTOR MAY, AT HIS OPTION DEVIATE FROM THESE PROCESS DETAILS.

SYM	DESCRIPTION	DATE	APPROVAL
ORIG	SYM 188 A REVISIONS	28 OCT 58	

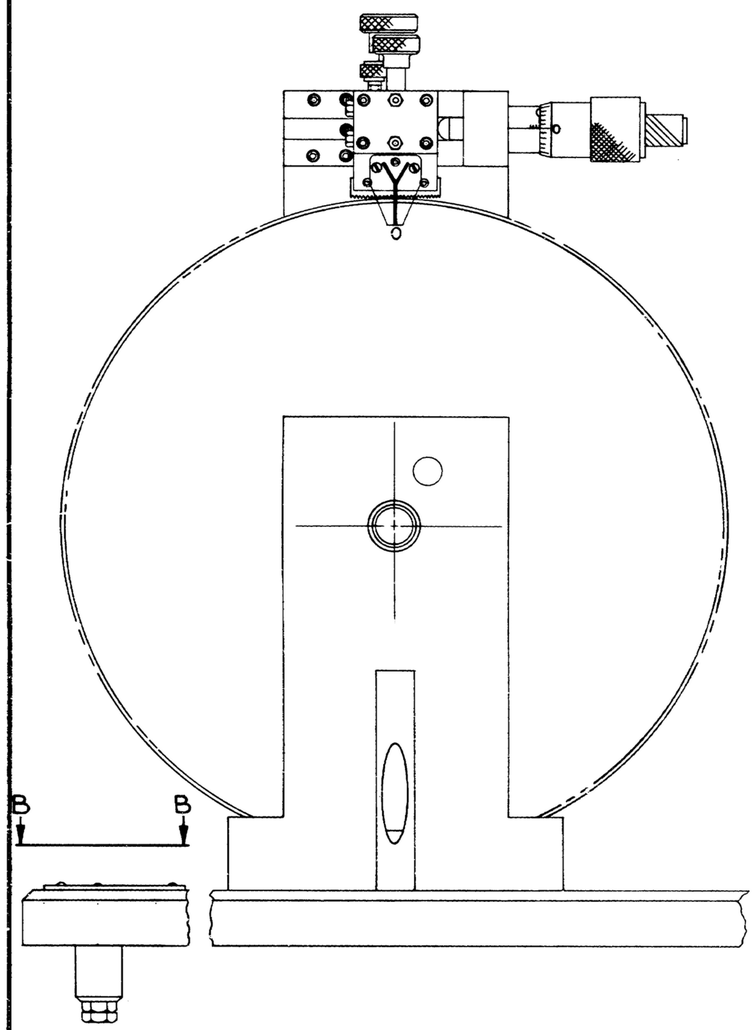

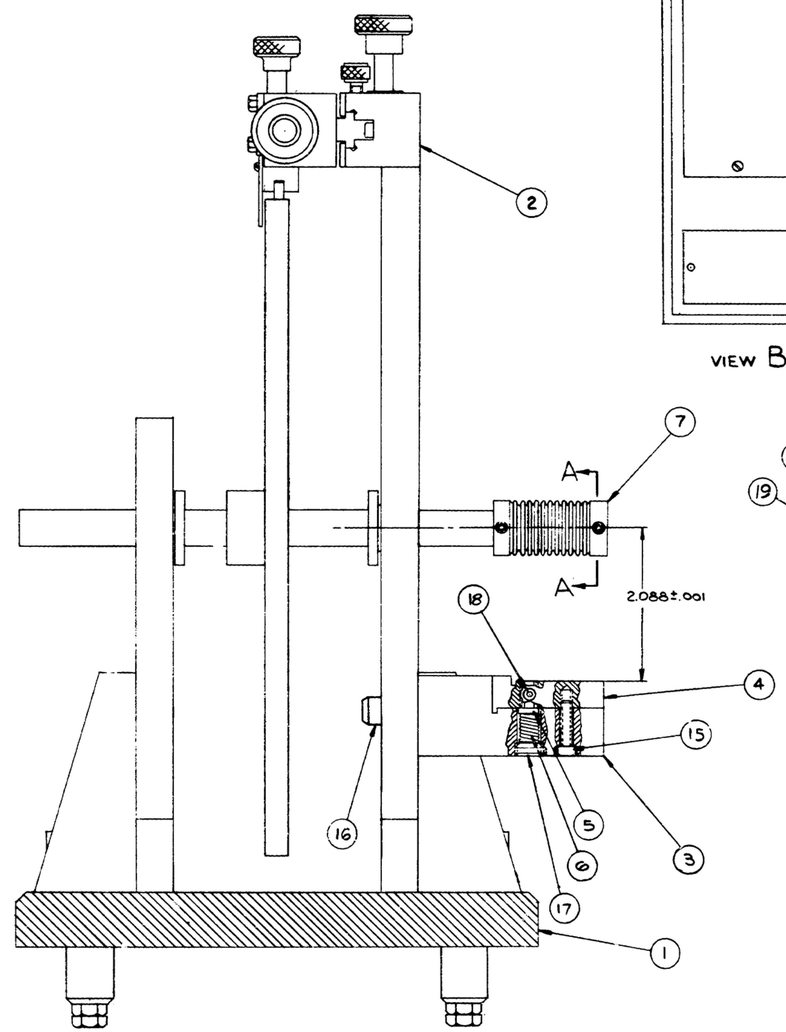

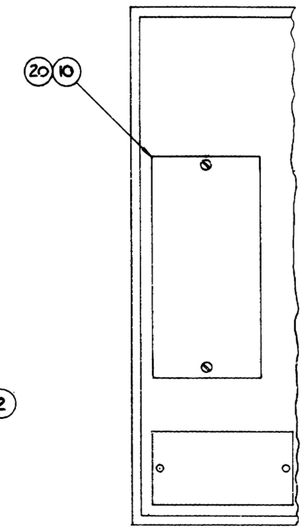

VIEW B-B

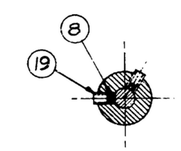

SECT A-A

SHEETS 2-5 MISSING

NOTES:

1. SUPPLIER FOR: (OR APPROVED EQUIVALENT)
   ITEM 2: MILLITEST COMPANY, HEMPSTEAD, L.I., N.Y.
   ITEM 14: VACO PRODUCTS CO, CHICAGO, ILL.
   ITEMS 15,16,17,18 & 19: SAMUEL HARRIS & CO, CHICAGO, ILL.
   ITEM 20: PARKER-KALON CO, CLIFTON, N.Y.
2. ONE INSULATOR, ITEM 9, REQUIRED ON VFO END OF COUPLING, 4 CARRIED AS SPARES.
3. ITEMS 11,12 13 & 14 & ROTARY INDEX HEAD ASSY TO BE STORED IN CASE SM-D-58783.
4. PART TO BE CLEAN & FREE OF BURRS & SHARP EDGES.

ITEM NO.	REQ'D	SIG PART NO.	DESCRIPTION	MATL-FINISH	FIN SIZE OR SPEC	SHT	NOTES
20	2	-20	SCREW, (#2x3/16 LG RH SELF-TAPPING)	CH STL-CAD PL		1	1
19	4	-19	SS, (8-36x3/16 LG FLUTTED SOC HDLS)	CH STL-CAD PL		1	1
18	2	-18	SS, (6-32x1/4 LG SOC HDLS CUP PT HEX)	CH STL-CAD PL &CHROMATE		1	1
17	2	-17	SS, (3/8-16x1/2 LG SOC HDLS CUP PT HEX)	CH STL		1	1
16	2	-16	MS, (1/4-20x3/4 LG ALLEN HD CAP)	STL-CAD PL &CHROMATE		1	1
15	2	-15	MS, (6-32x3/4 LG ALLEN HD CAP)	STL-CAD PL &CHROMATE		1	1
14	1	-14	SCREWDRIVER #P2				1&3
13	1	-13	TOOL			4	3
12	1	-12	TOOL			4	3
11	1	-11	TOOL			4	3
10	1	-10	NAMEPLATE		1 7/16x3	3	4
9	5	-9	INSULATOR		.250x3/8	3	4
8	2	-8	SLUG		.120x.093	3	4
7	1	-7	COUPLING		3/4x1 9/32	3	4
6	2	-6	SPRING		1/2x3/4	3	4
5	2	-5	PLUNGER		.308x1/2	3	4
4	1	-4	INSERT		7/16x1 1/2x3	3	4
3	1	-3	BLOCK		2 1/2x3x1 3/32	3	4
2	1	-2	MICROMETER CONTROL HEAD			5	1
1	1	SM-D-58788-1	ROTARY INDEX HEAD			2	

SEE TABLE FOR PART NO. LIST OF MATERIAL

NEXT ASSY	USED ON
# ~~MOTOROLA APPL~~	

NEXT ASSY	USED ON
	SC-GL-57655
APPLICATION	

UNLESS OTHERWISE SPECIFIED
DIMENSIONS ARE IN INCHES
TOLERANCES ON
FRACTIONS ±1/64 DECIMALS ±.005 ANGLES ±0°30'

DRAWN E.D.H.
DATE 26 AUG 58
CHECKED W.J.P 14 JAN 59
APPROVED 14 JAN 59
DATE 26 AUG 58

~~MOTOROLA INC.~~
ORDER NO. 14385-PC-58-A1
SIGNAL CORPS
REVIEWED XXX
APPROVED
SCALE 1/1

ROTARY INDEX HEAD ASSEMBLY

DEPARTMENT OF THE ARMY
SIGNAL CORPS ENGINEERING LABORATORIES
FORT MONMOUTH NEW JERSEY

SM-D-58788
SHEET 1 OF 5 SHEETS

WHEN REFERRING TO THIS DRAWING STATE DRAWING NO., APPLICABLE ISSUE SYMBOL, IF ANY, AND DATE.

~~C-3886-D-1048~~